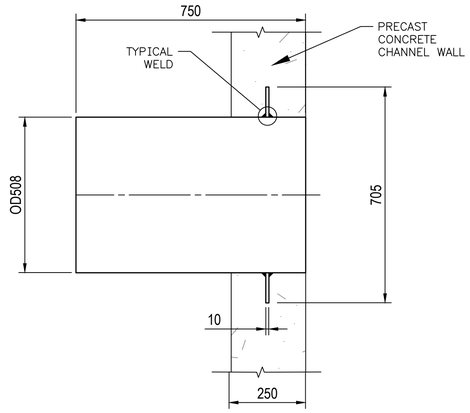


ITEM 7A– DN500 SS316 END PIPE
WITH PUDDLE FLANGE (OD508)
1 REQUIRED

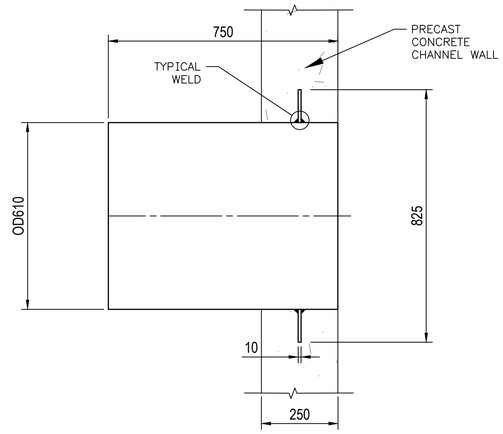


ITEM 7B – DN600 SS316 END PIPE
WITH PUDDLE FLANGE (OD610)
2 REQUIRED

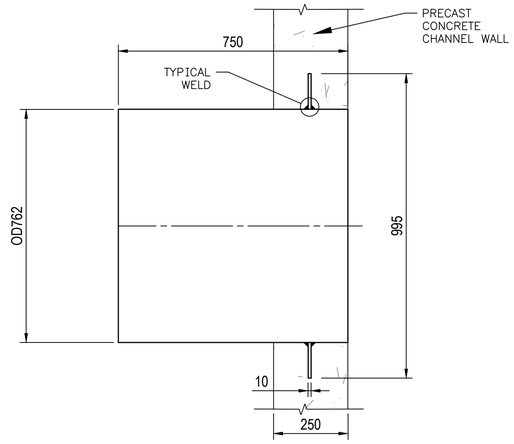


ITEM 7C – DN750 SS316 END PIPE
WITH PUDDLE FLANGE (OD762)
1 REQUIRED

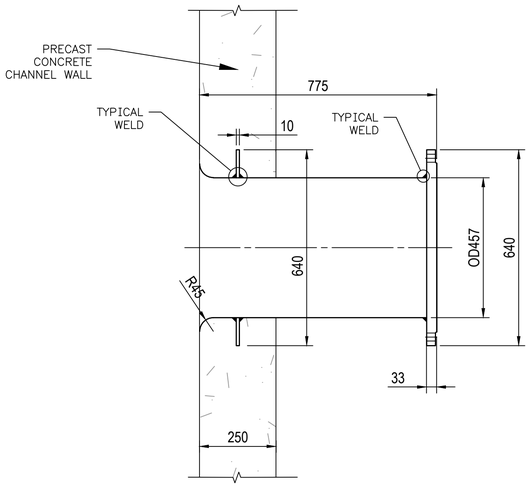


ITEM 7D – DN450 SS316 END PIPE WITH
BELLMOUTH INLET & PUDDLE FLANGE (OD457)
2 REQUIRED

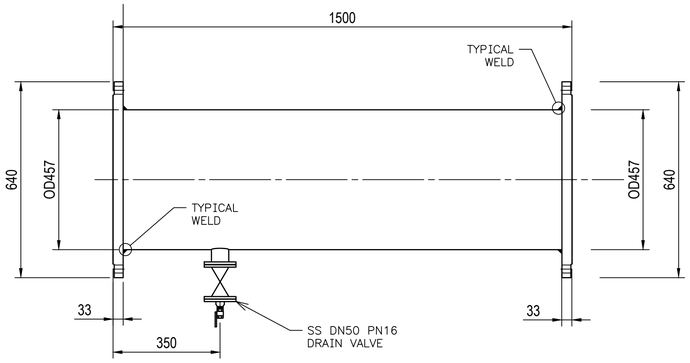


ITEM 12A – DN450 SS316
FLANGED PIPE SPOOL (OD457)
2 REQUIRED

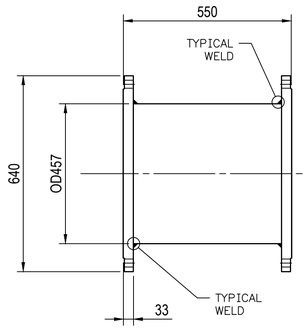


ITEM 12B – DN450 SS316
FLANGED PIPE SPOOL (OD457)
2 REQUIRED

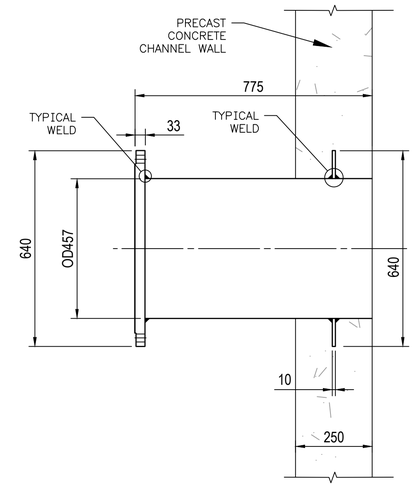


ITEM 7E– DN450 SS316 END PIPE
WITH PUDDLE FLANGE (OD457)
2 REQUIRED

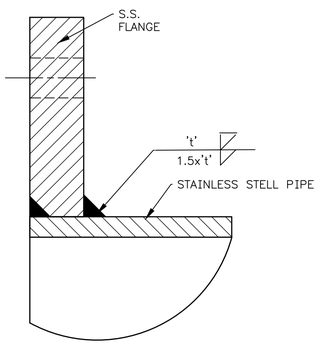


TYPICAL WELD – FLANGE WELDING
NOTE: USE E309MoL WELDING ELECTRODE OR SIMILAR

**GENERAL NOTES**

1. ALL DIMENSIONS ARE IN MILLIMETRES UNLESS OTHERWISE NOTED.
2. WELDING SHALL COMPLY WITH AS 4041 – PIPEWORK CLASS 2P.
3. FABRICATED STAINLESS STEEL ITEMS SHALL BE TYPE 316L SCH10S.
4. FLANGES SHALL BE MANUFACTURED IN ACCORDANCE WITH AS 4087.
5. UNLESS NOTED FLANGES ARE PN16 AND RAISED FACE JOINT UNLESS OTHERWISE NOTED.
6. COMPRESSED FIBRE GASKET MATERIAL: NOVUS 30 OR KLINGERSIL C4430, THICKNESS 1.5 MM, ALLOWABLE GASKET STRESS OF 135 MPA @ 20 °C.
7. BOLTS, NUTS AND WASHERS COMPLY WITH AS 4291 AND SHALL BE SS316.

FLANGE DETAILS AS4087 PN16

| PIPE DN | FLANGE OUTSIDE DIA. (mm) | WELD THICKNESS (t) | BOLT HOLE DIA. (mm) | NO. OF BOLTS | SIZE OF BOLTS | BOLT/TORQUE (Nm) | STAINLESS STEEL BOLTING GRADE |
|---|---|---|---|---|---|---|---|
| DN450 | 640 | 5 | 26 | 12 | 24 | 435 | A4–70 |
| DN500 | 705 | 5 | 26 | 16 | 24 | 631 | A4–70 |
| DN600 | 825 | 6 | 30 | 16 | 27 | 861 | A4–70 |
| DN750 | 995 | 7 | 33 | 20 | 30 | 1524 | A4–80 |

100 50 0 100 200 300 400 500 600 700 mm
SCALE 1:10

ISSUED FOR TENDER

| REV | DATE | REVISION DESCRIPTION | DRAWN | CHECKED | DESIGNED | APPROVED | CLIENT |
|---|---|---|---|---|---|---|---|
| 1 | 19.04.24 | DIMENSIONS AND DETAILS ADDED | BD | MW | BD | GD | CKB |
| 0 | 01.03.24 | ISSUED FOR TENDER | BD | MW | BD | GD | CKB |

WISE
WATER INFRASTRUCTURE SCIENCE & ENGINEERING
WISE PROJECT NO. 1034–03–08

NORTH

CLIENT
City of Kalgoorlie Boulder

| | | |
|---|---|---|
| DRAWN: R. BANAA | DATE: 1/12/2023 | CITY OF KALGOORLIE–BOULDER |
| CHECKED: M. WOOD | DATE: 1/12/2023 | SOUTH BOULDER WWTP |
| DESIGNED: R. BANAA | DATE: 1/12/2023 | INLET WORKS |
| APPROVED: G. DEGEBRODT | DATE: 1/12/2023 | PIPE SPECIAL DETAILS |
| CLIENT: | DATE: | |

SCALE: AS NOTED | DRG No 1034–03–08–DWG–014 | REV 1